Inverter Swimming Pool Heat Pump

Model No.: BYC-028TC3/ BYC-035TC1/ BYC-035TC3

Thank you very much for purchasing our product, please keep and read this manual carefully before you install heat pump.

Packing List

No.	Name	Qty.	Remark
1	Installation &Operation Manual	1	
2	Wire-controller	1	
4	Drain-pipe (2 m)	1	
5	Drain-pipe connector	1	
6	Rubber shock absorber	4	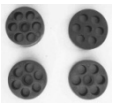
7	Heat Pump Unit (The pipe connector has been installed on the machine)	1	

Please keep installation manual properly, and read it carefully before using.

⚠The unit must be installed by professional personnel according to the instructions in this manual.

⚠WARNING: if the unit is installed in locations that are at risk of lightning strikes, lightning protection measures must be provided.

⚠WARNING: The unit is not suitable for use in winter: all water must be drained from the unit during overwinter or it could freeze inside the unit causing damage to the internal components.

Content

1. Accessories
2. Safety
3. Heat pump working principle
4. Installation of the unit
5. Installation of the pipeline
6. Installation of optional accessories
7. Installation and operation of electric devices
8. Operating instructions
9. Wireless control
10. Error codes & Solutions
11. Adjusting and initial operation
12. Operation and maintenance
13. Fault analysis and elimination method
14. After-sale service

1. Accessories

Each unit produced by our factory comes with the following accessories:

No.	Name	Qty.	Use
1	Installation & Operation Manual	1 PC	User Guide to install the unit
2	Wire controller	1 PC	Used for the machine operation interface
3	Drain-pipe	1 PC	Used for draining the condensate water
4	Drain-pipe connector	1 PC	To connect the drain pipe to the heat pump
5	Shock absorb Rubber	4 PCS	To reduce vibration and noise
6	Heat pump unit	1 SET	For heating water

In order for the system to work the following parts are required

No.	Name	Qty.	use
1	Water pump	1	To circulate the pool water
2	Filter system	1	To clean the pool water which passes through the heat pumps
3	Water pipes system	1	To connect the equipment and circulate the water in the pool

NOTE ⚠

The types and quantity of the water pipes, valves, filter equipment, sterilizing equipment used for the swimming pool heating/circulation pipe system, depend on the project design. We do not recommend to install auxiliary electric heaters in the system.

2. Safety

Range of application:

1.Power supply: BYC-028TC3/-035TC3: 380V-415V/3N~50Hz.
BYC-035TC1: 220V-240V/1N~50Hz.

2.Ambient temperature: -15°C∽43°C ：

3.Working water temperature: Min. inlet water temperature 8°C, Max. outlet Water Temperature 40°C. If the system is always used beyond the available water range, please

●The installation should be done by the professional persons, to prevent leaking, electric shock or fire.

● Confirm the ground connection, if the ground connection is not correctly done, it may cause electric shock.

THE UNIT MUST BE EARTHED PROPERLY BEFORE USAGE

● When installing the heat pump in a small room, make sure it is well ventilated.

● Don't put fingers or objects into the air inlet outlet as the rotating fan could cause serious injuries.

● If you smell anything burning, turn off the manual power switch immediately, stop operation and contact the after-sale service department. Continued abnormal operation may cause electric shock fire.

● When the unit needs to be removed or re-installed, please ensure that the work is carried out by qualified professionals. If the installation is not correct, it may cause unit operation failure, electric shock, fire, hurt, leaking, etc.

● Please ensure that any repairs carried out by qualified professionals: failure to make proper repairs could cause unit operation failure, electric shock, fire, hurt, leaking, etc..

● Do no install the unit near flammable sources, as any leakages could cause a fire.

● Make sure the base on which the unit is installed is strong enough to support it.

● Make sure a leakage protection switch is installed to prevent electric shock or fire.

●When cleaning the unit, stop operation, switch off the power and disconnect the power.

3. Heat pump unit working principle

3.1 Heat pump operation

Heat pumps use heat from the sun by collecting and absorbing energy from the outside air. This energy is then compressed and transferred to the pool water. Your existing water pump circulates the water through the heat pump, which is normally installed next to the pool filtration system, and the water warms up. The heat pump timer can be set so that the pump operates at the times you want: for example, during daylight hours from 9am to 5pm.

- The unit contains a fan that draws in outside air and directs it over the surface of the EVAPORATOR (energy collector). The liquid refrigerant inside the EVAPORATOR coil absorbs the heat from the outside air and becomes a gas.
- The warm gas inside the coil passes through the COMPRESSOR, which concentrates and increases the heat to form a very hot gas, which then passes through the CONDENSER (water heat exchanger). It is here that the heat exchange occurs as the heat from the hot gas is transferred to the cool swimming pool water circulating through the heat exchanger.
- The pool water becomes warmer and the hot gas returns to its liquid form as it flows through the CONDENSER coil. The gas then passes through the Electronic Expansion Valve and the whole process begins again.
- Developments in heat pump technology mean that today heat pumps can efficiently collect heat from the outside air even when the temperature is as low as 7-10°C. This means that for tropical and subtropical climates the pool can be maintained between 26°C and 32°C.

3.2 Air source heat pump working principle

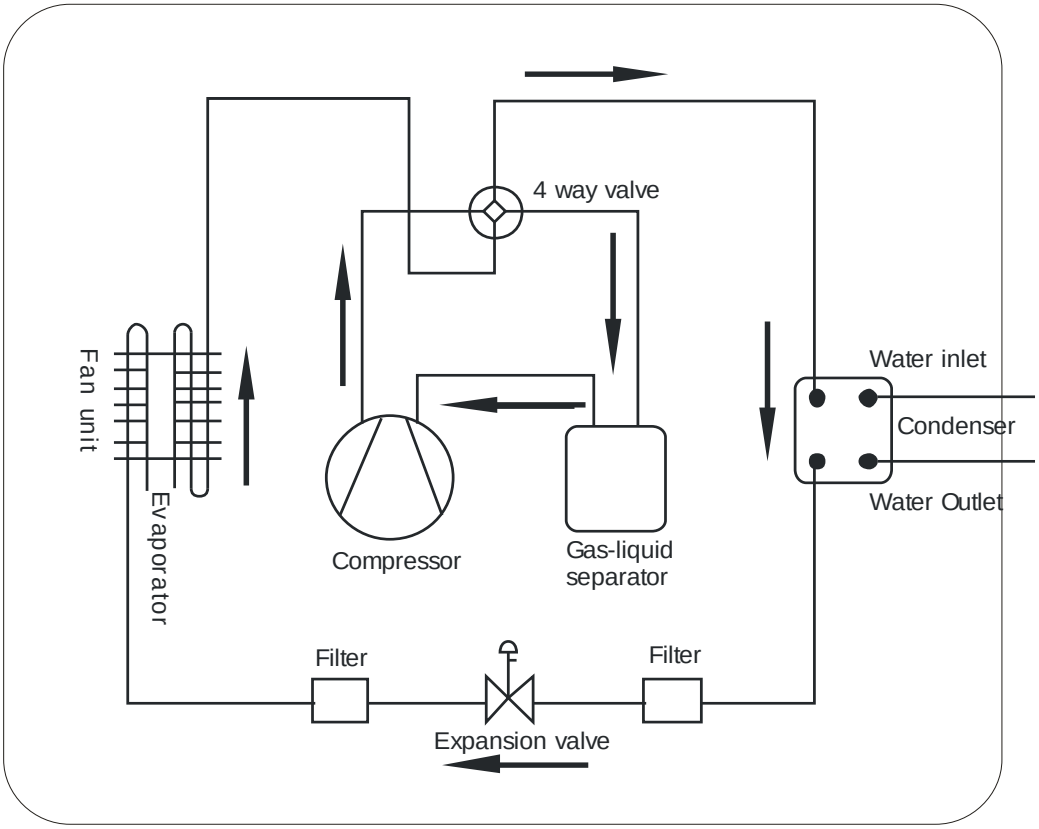

Figure 1

Qc (Heat energy) = Qa (Compressor consumption) +Qb (Heat energy absorbed from ambient environment)

4. Installation of the unit

4.1 Installation Guidelines

● Avoid installations in locations containing mineral oil.

● Avoid installation in locations where the air contains salt or other corrosive gases.

● Avoid installation in locations with serious power supply voltage fluctuation.

● Avoid installation in unstable places, such as a car or cabin.

● Avoid installation near flammable items.

● Avoid installation in locations with strong electromagnetic forces.

● Avoid installation in locations with harsh environmental conditions.

4.2 Installation check

● Check the model, number, name etc , to avoid incorrect installation.

● Make sure there is enough space for installation and maintenance.

●Install in a dry well-ventilated place and make sure there are no obstructions around the air inlet and outlet.

● Make sure the supporting base strong enough and prepared to that shocks can be avoided.

● The power supply and diameter of the cables used must be in accordance with the electrical installation requirements.

● Electrical installation must comply with the relevant technical standards of electrical equipment, and electrical insulation work must be done.

● The unit must be put horizontally for at least eight hours before running.

4.2.1 Exploded view

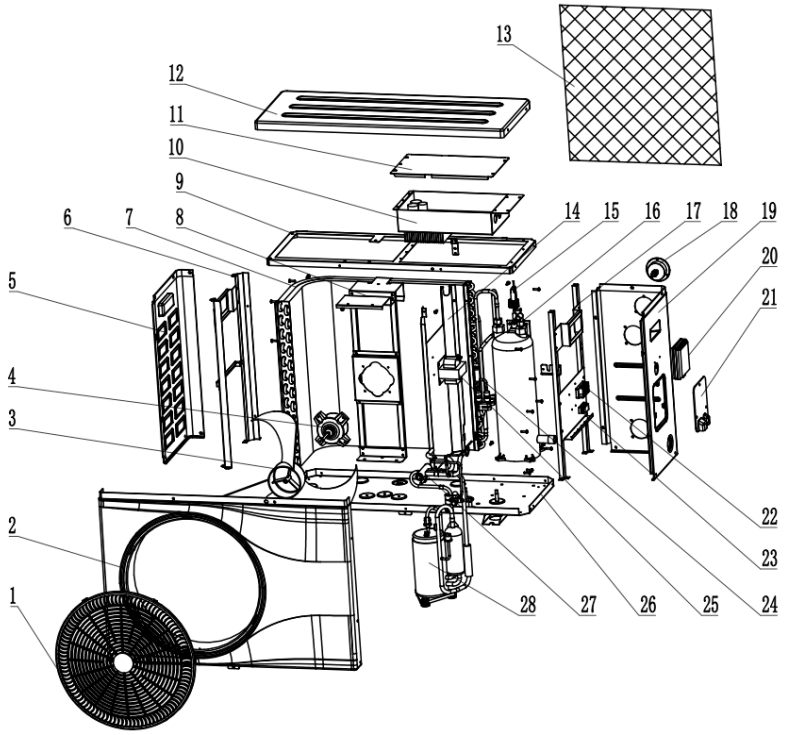

NO.	Parts	NO.	Parts
1	Fan protective gill	15	Water flow switch
2	Front panel	16	Titanium heat exchager
3	Fan blade	17	Right structure
4	Fan motor	18	Manometer
5	Left panel	19	Right panel
6	Left structure	20	Control panel
7	Evaporator	21	Electrical terminal cover
8	Fan motor mount	22	Electrical terminal block
9	Upper structure	23	Electrical cable support
10	Electric box cover	24	Electrical expansion valve
11	Electrical box	25	Reactive resistance
12	Top cover	26	Bottom panel
13	Plastic net	27	Four-way valve
14	Middle panel	28	Compressor

4.3 Installation space

Please observe the space requirements indicated below for optimal operation and maintenance.

4.3.1 Heat pump dimensions

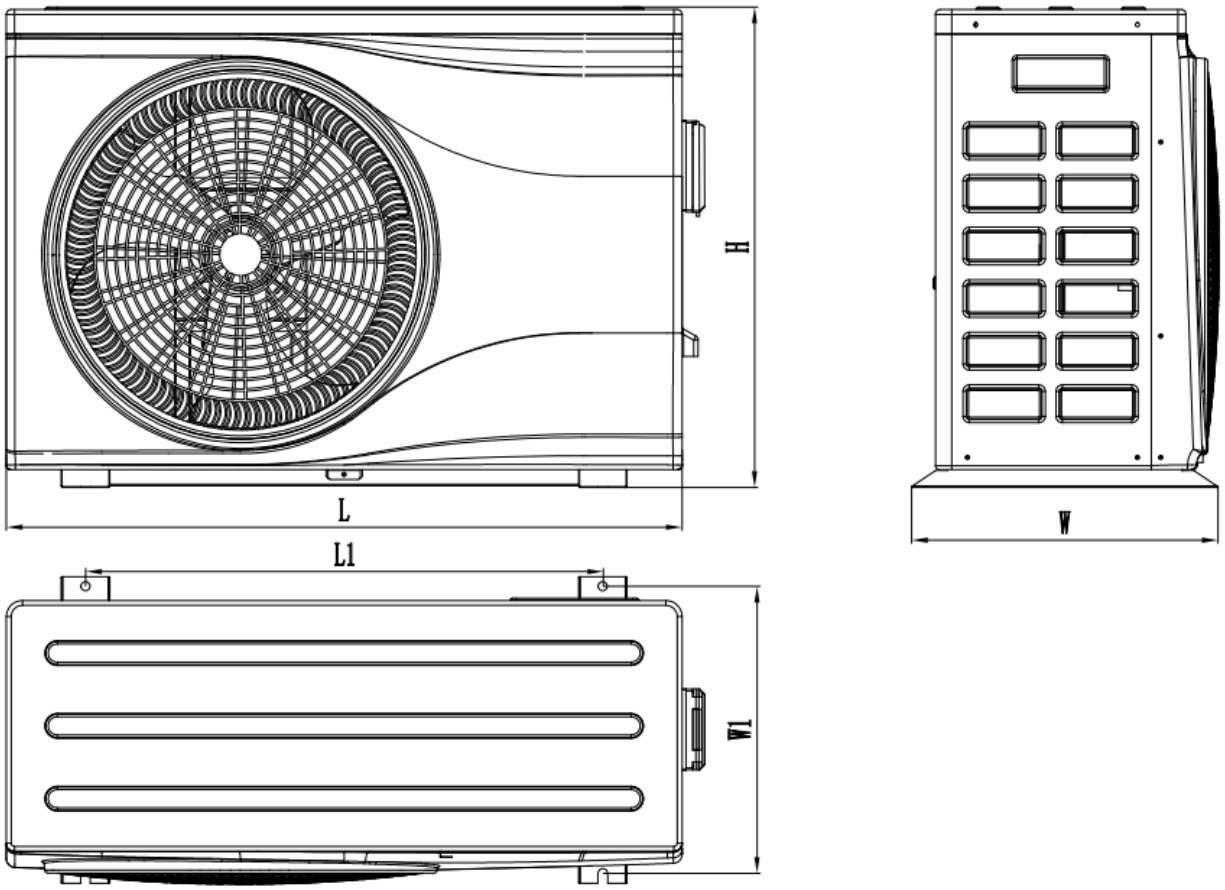

Item	L	W	H	L1	W1
BYC-028/035	1056	445	740	710	421

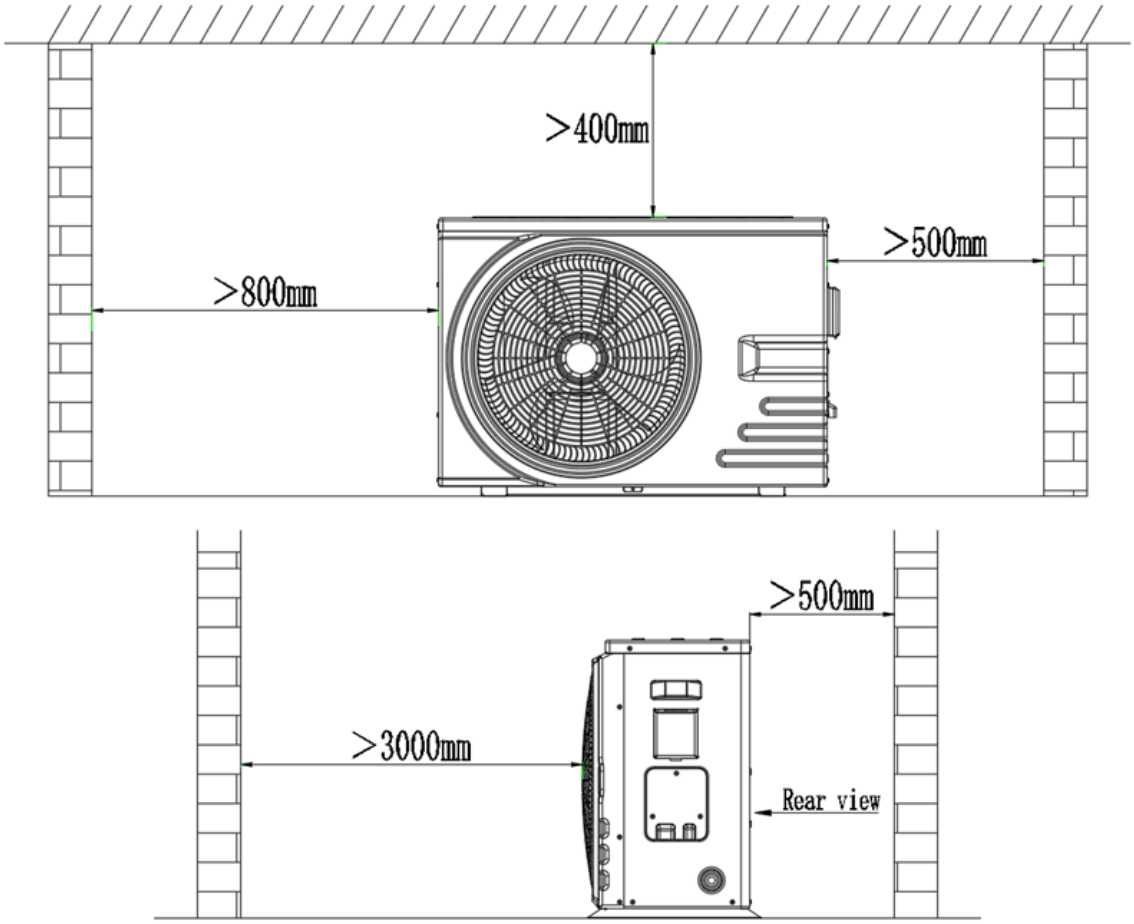

Figure 2. Horizontal installation space requirements（mm）

4.4 Installation base for heat pump

Please refer to Figure 4.

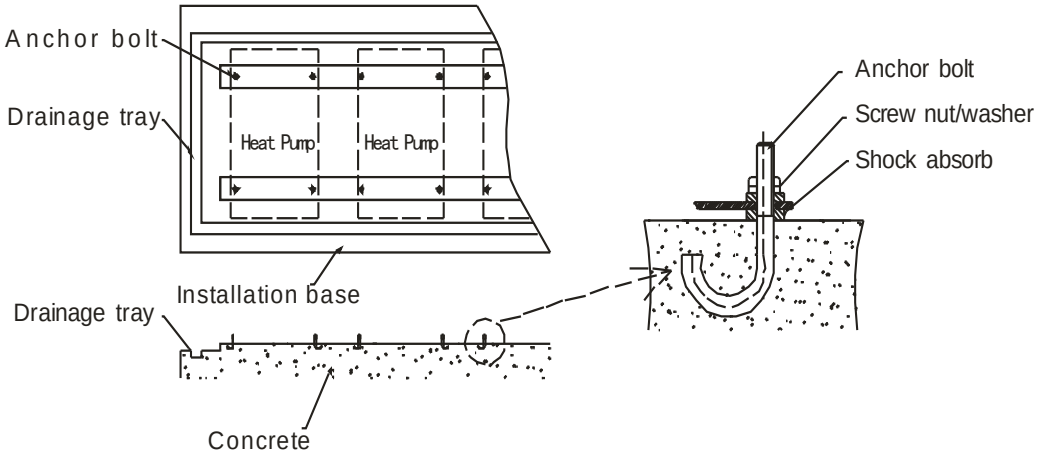

Figure 4 Installation base

4.5Lifting

●Please use four or more soft lifting belts to move the sets (see Figure 5).

●Please use protective plates on the surface of the units when handling to avoid scratches and deformation.

●Double-check that the support base is strong enough before fixing the unit.

● The heat pump will produce condensation water: remember to provide drainage channel when making the installation base.

●Please install shock absorber on the surface of the base.

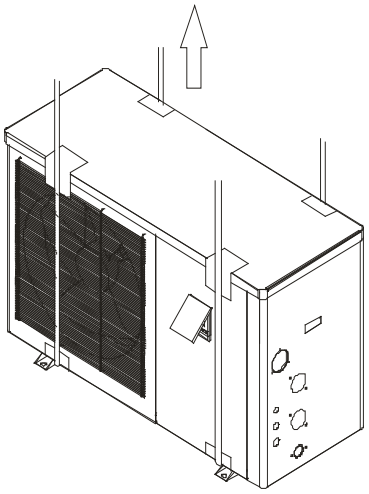

Figure 5 Lifting diagram

5. Installation of pipes

5.1 Attention

● Prevent air, dust and other material from going into the water pipes.

● Fix the whole system before installing the water pipes.

● Water inlet and outlet pipes should be protected by an insulation layer.

●Make sure that there is a stable water flow, to prevent excessive throttling.

●Do not handle, move or lift the unit by holding the water inlet and outlet pipe: use only the holes on the beam of the base (see Figure 5)

● When connecting the water inlet and outlet pipes, use two pipe wrenches to adjust the two parts of

the pipes, and make sure the water inlet and outlet pipes do not twist (see Figure 6).

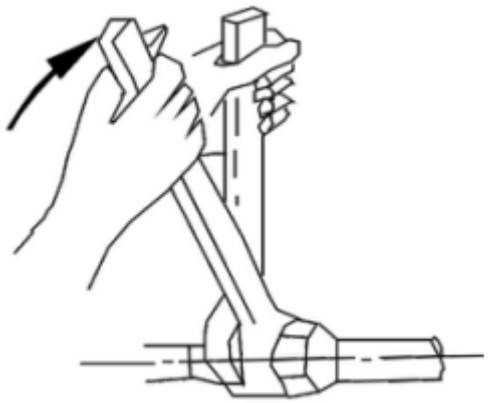

Figure 6

5.2 Instructions

5.2.1 Symbols

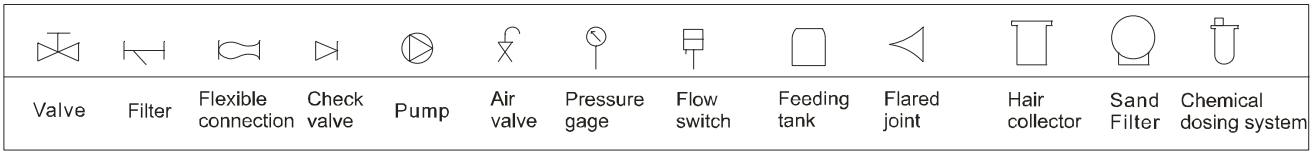

5.2.2 Pipeline installation diagram

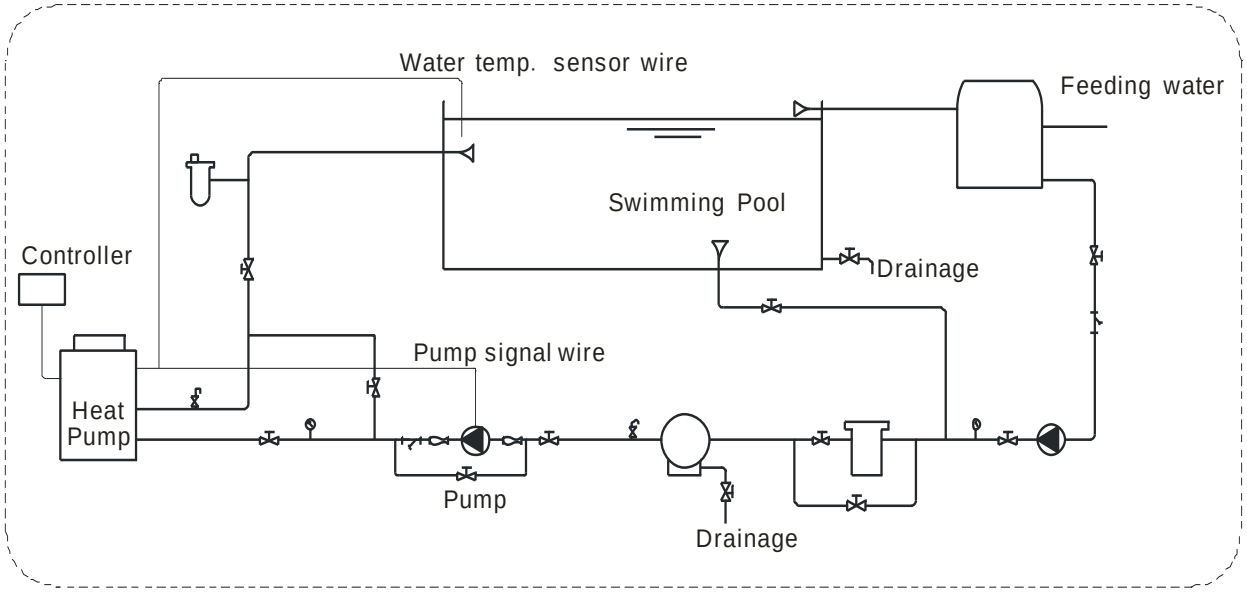

Figure 7 Diagram（Single unit for reference）

●It is recommended to install a one-way valve for each unit to prevent water back flow.

●Multiple units can be installed as part of a system, but each unit should be controlled independently.

●All pipes and valves should be insulated.

5.2.3 Connection sizes

Model No.	Inlet	Outlet
BYC-028/035	DN50	DN50

●The pipe pressure and flow rate should be calculated before selecting the diameter of the pipe, pressure drop range is 0.3∽0.5 kgf/cm2(3∽5m）head pipe flow rate range is 1 .2∽2. 5 m/s.

●The hydraulic calculation should be made after selecting the pipe diameter. If the resistance is more than the pump head, then a more powerful pump or larger pipes are required.

5.2.4 Required Water Quality

● Bad quality water will produce more lime scale and sand: this kind of water should be filtered and demineralize.

●The water quality should be analyzed before operating the unit: PH value, conductivity, Chloride ion concentration and sulphate ion concentration should be checked.

●Acceptable water quality shown below:

PH value	Total hardness	Conductivity	Sulphate ion	Chlorine ion	Ammonia ion
7～8.5	< 50ppm	<200μV/cm(25℃)	None	< 50ppm	None
Sulfate ion	**Silicon**	**Iron content**	**Sodium**	**Ca**	
< 50ppm	< 50ppm	< 0.3ppm	No requirement	< 50ppm	

● Suggested filter mesh = 40.

6. Installation of optional accessories

6.1 Selection of the water pump

●The circulation pump is required for the system to operate, there is a terminal connection for the pump (single phase)

NOTE ⚠

For single-phase pumps, please check the wiring diagram.

●Head of circulation pump = height difference between water level and main unit + total pipeline resistance (determined by the hydraulic calculation) + pressure loss of main unit (see nameplate on heat pump).

NOTE ⚠

Multiple units are installed in parallel place more demand on the water pump requirement.

6.2 Water pipe selection

●The selection of the water pipe should be based on the actual system specifications

●The flow switch can be installed horizontally or vertically. If installed the direction of the water flow must be upwards and NOT downwards.

● The flow switch must be installed on a straight pipeline, and there must be more than five times the length of the pipe diameter on either side of the flow switch (see Figure 8 below). The direction of fluid must follow the arrow on the controller. The terminal block should be installed in a position that is easy to operate.

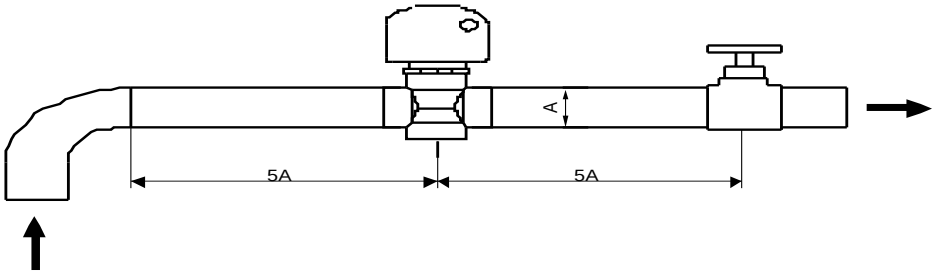

Figure 8

7. Installation of electrical devices

7.1 Electrical wiring

●The unit should have a dedicated power supply in accordance with the recommended voltage.

●Unit power supply circuit must have an effective external grounding.

●Wiring and electrical connections must be made by qualified professionals in accordance with the wiring diagram.

●Power line and signal line layout should be neat and cables should not interfere with each other.

●Do not install the units if the power supply specifications are not met.

●After all wiring connections have been completed, check them again carefully before switching on the power.

7.2 Electrical Wiring Specification

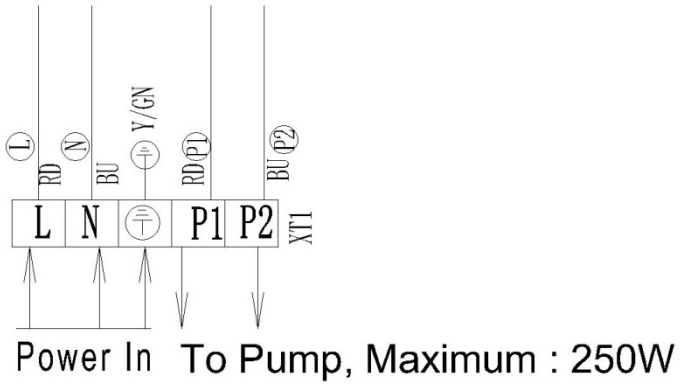

Figure 9

7.3 Circulation pump installation

The heat pump only provides a signal for the circulation pump, A separate A.C. Contractor is required to connect the circulation pump.

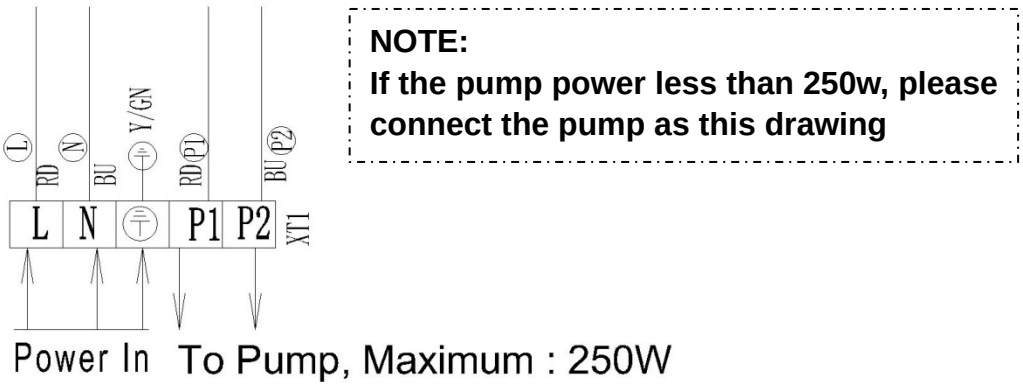

Figure 10

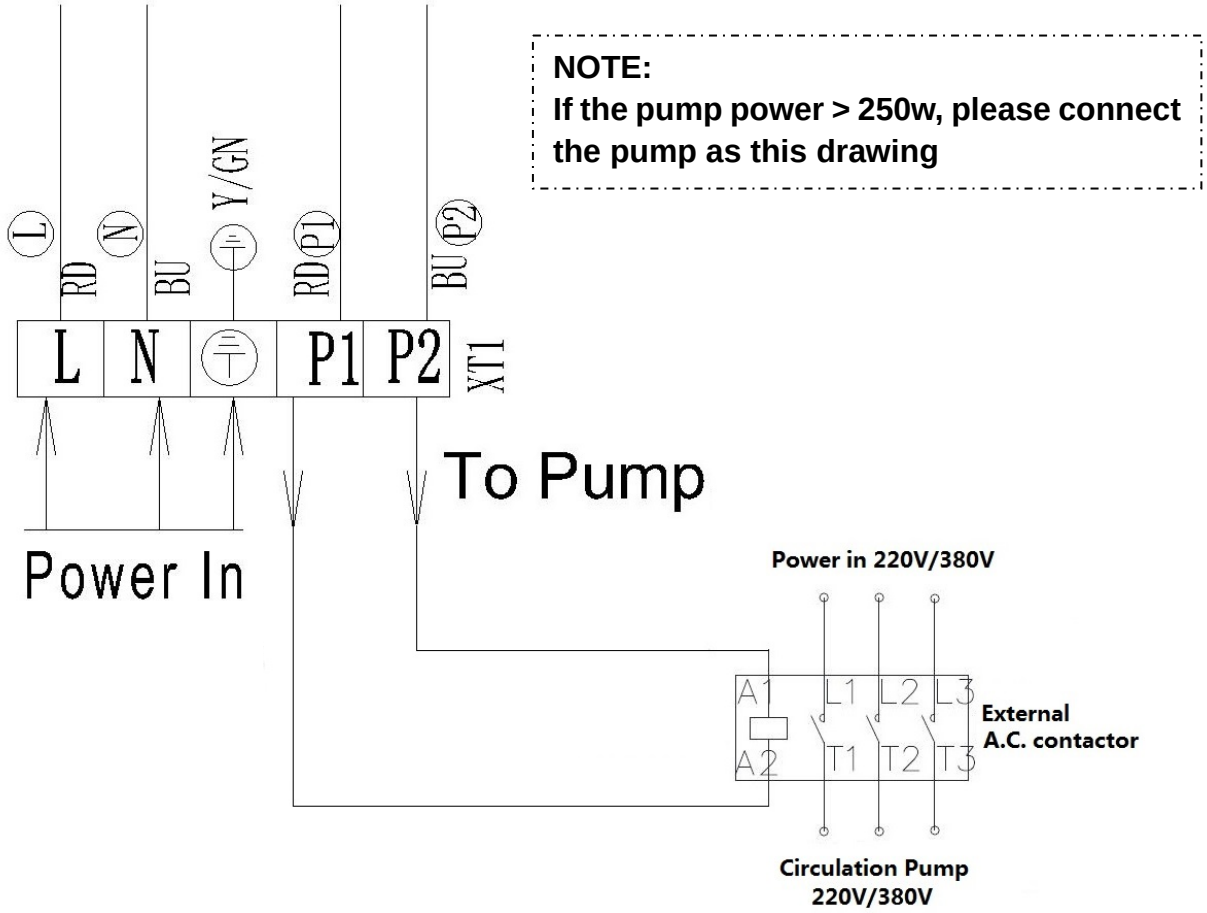

Figure 11

7.4 Electric wiring diagram

COMP : COMPRESSOR	GND : GROUND
AMBT: AMBIENT TEMPERATURE SENSOR	WFS: WATER FLOW SWITCH
LOW : LOW PRESSURE SWITCH	HIGH : HIGH PRESSURE SWITCH
COIL: EVAPORATOR COIL TEMPERATURE SENSOR	OWT/INWT: INLET / OUTLET WATER TEMPERATURE SENSOR

Electrical wiring diagram

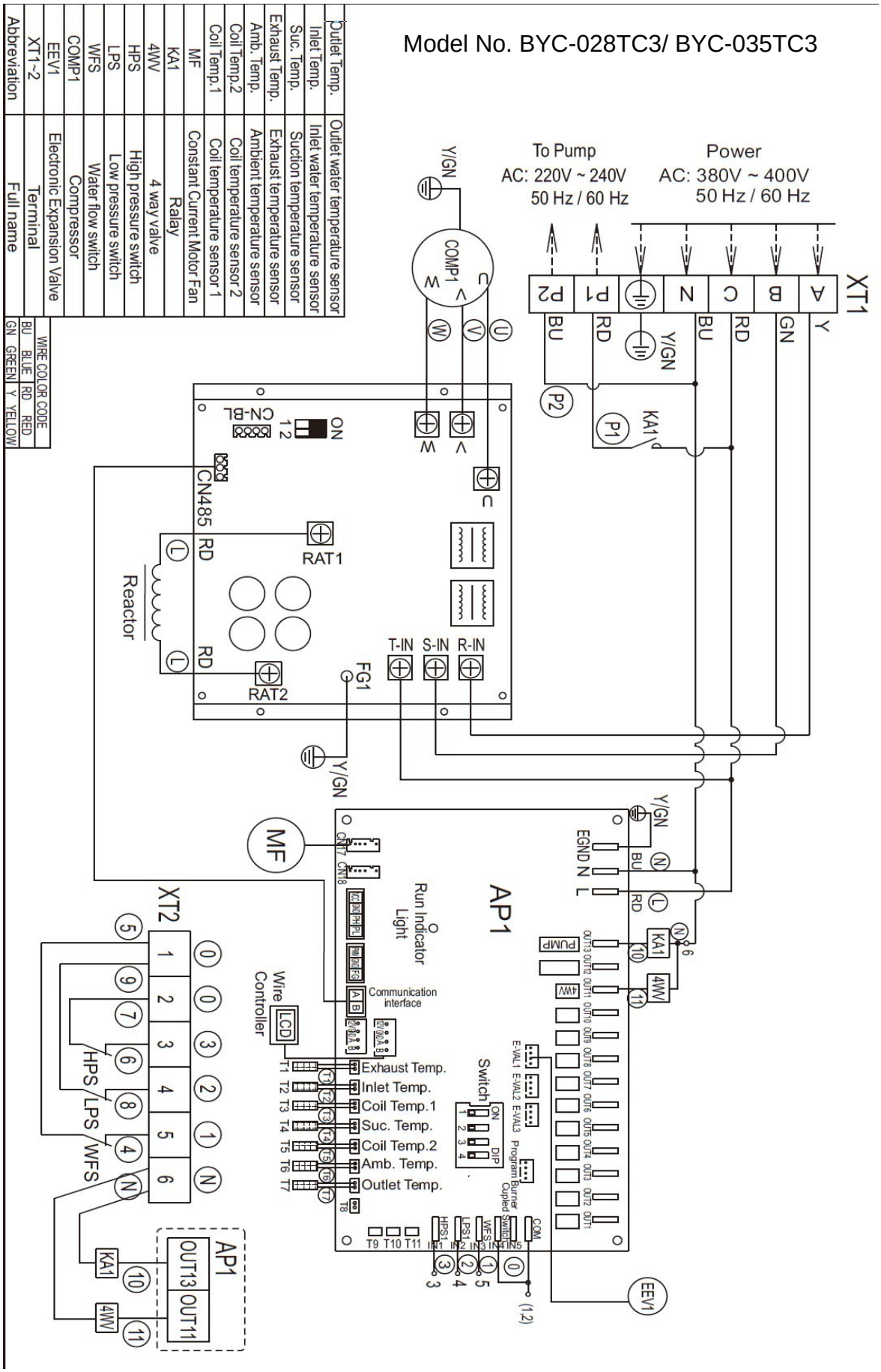

Model No. BYC-035TC1

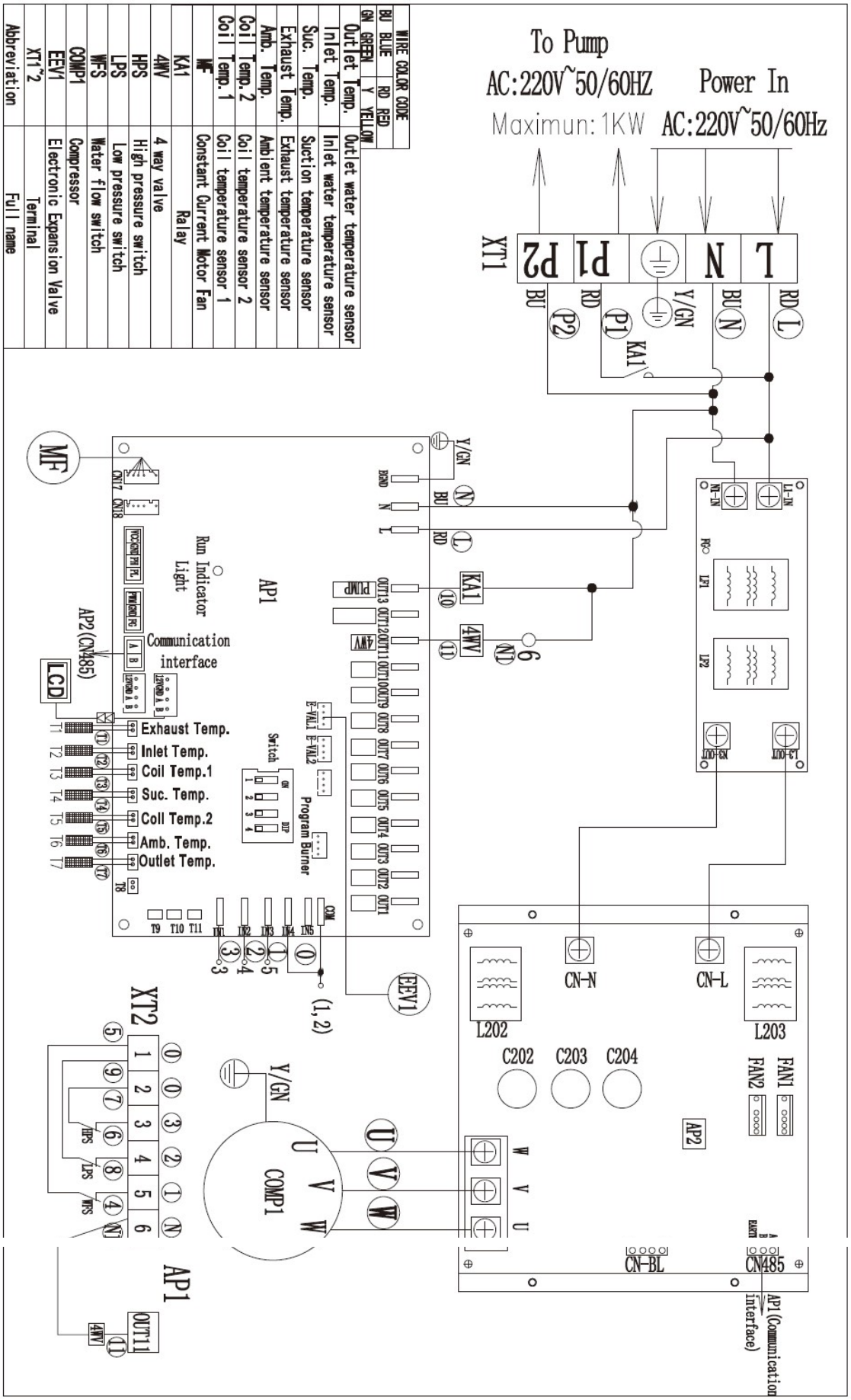

8. Operating Instructions

8.1 Wire controller (Buttons and Icons)

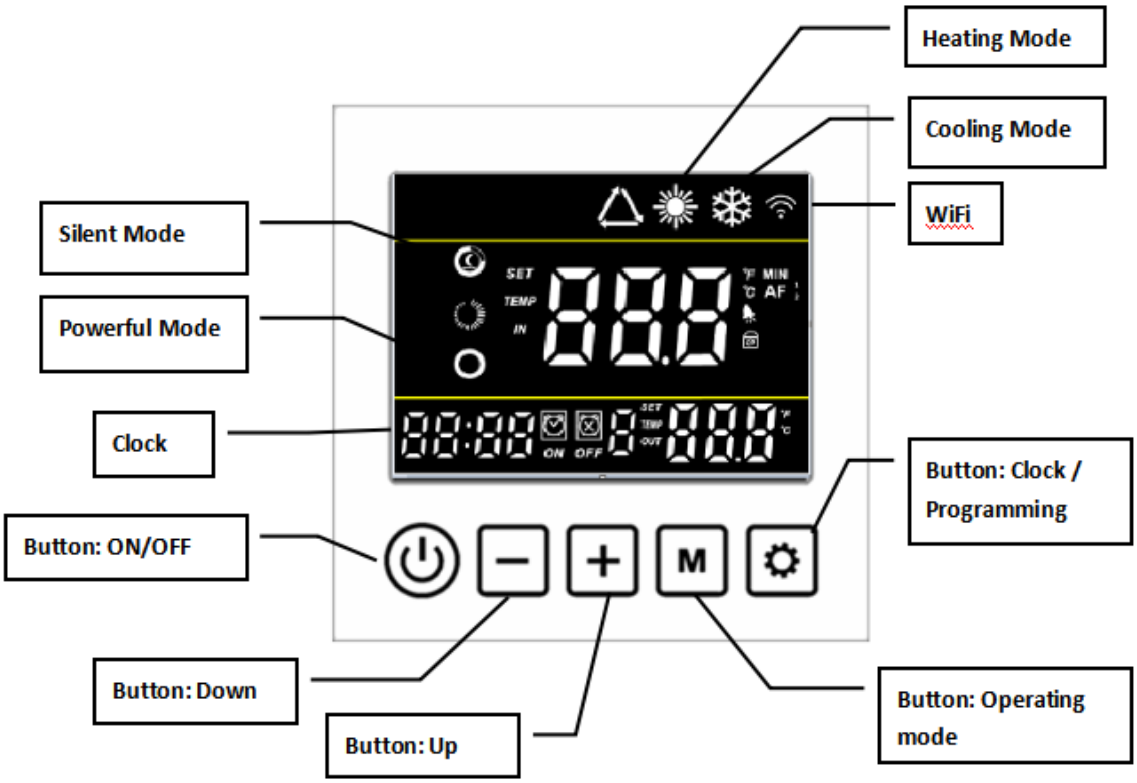

8.2 Start up & Locking

⚠ **Attention: Before you start the machine, please make sure the filtration pump is running and there is water flow goes through the heat pump.**

Hold the button ⏻ for 3 seconds to switch the heat pump ON or OFF.

On the main interface, hold [+] and [−] for 3 seconds to lock or unlock the controller.

When the controller is locked, the icon [🔒] appears.

6.3 Mode Selected

Hold the button [M] for 3 seconds to change the below three operating functions each time:

☀ Heating function ❄ Cooling function △ Auto function

Under Auto function, if the real situation is in Heating, it will show △ and ☀, if the real situation is in Cooling, it will show △ and ❄.

Press button [⚙] to change the below two running modes each time:

Silent mode: Choose this mode that the heat pump operates silently.

Powerful mode: Choose this mode that the heat pump operates powerfully.

8.4 Set the required temp.

On the main interface, press + or − to adjust the required water temp. Of your pool, then press ⏻ to save the setting.

Or you can adjust the Parameters P01/P02 to set the required water temp.

8.5 Clock setting

Hold ⚙ and − for 3 seconds to enter Clock setting interface.

Clock display on left bottom flashes. Change the Hours using + or −, press ⚙ to save the Hours,

the Minute flashes, press [+] or [−] to adjust the Minute. Press [⚙] to save the data.

8.6 Timer setting

Hold the button [⚙] for 3 seconds to enter the setting of Timer ON & Timer Off groups.

Then use the same method to make the setting of Hour and Minute like Clock setting.

Pay attention: There are 3 groups Timer for your every day setting.

See above photo, the icon 'ON' will flash when setting the Timer ON. The icon 'OFF' will flash when setting the Timer OFF.

The last data is the Order No. of your current setting for Timer group. It will flash under Timer setting.

Press [⏻] to save the Timer setting and back to the main interface, it will show Numbers of Timer groups you have set on the main interface.

Cancellation of Timer: When the Timer On is same to Timer Off, the current Timer group has been canceled.

8.7 Definition of other icons

: Defrosting when it flashes

: WiFi connected. It will flash under WiFi connecting.

: It will flash when there is Error code or system protection.

8.8 Manual defrosting

Hold M and − for 5 seconds, and when the Piping temp. is below than Exit defrosting temp., the system can enter into Manual defrosting.

8.9 Parameters Setting

On the main interface, hold [+] for 3 seconds to enter Parameter setting. Press [+] and [−] to check the parameter from P01~P05, press [⚙] to select the parameter, then press [+] and [−] to adjust the data, then press [⚙] again to save the data. Press [⏻] to go back the main interface.

Code	Description	Range	Default
P01	**Desired water temp. in Heating mode**	**8℃~40℃**	**27℃**
P02	**Desired water temp. in Cooling mode**	**8℃~28℃**	**27℃**
P03	**Desired water temp. in Auto mode**	**8℃~40℃**	**27℃**
P04	**Adjustment of water temp. difference before restart**	**1℃~18℃**	**1℃**
P05	**Stop once the temperature is reached**	**0=Non stop, 1=Stop**	**1**

8.10 Running Parameter checking

On the main interface, hold [−] for 3 seconds to enter Parameter checking. Press [+] and [−] to check the parameter from A01~A14. Press [⏻] to go back the main interface.

Code	Description	Scope
A01	Inlet water temp.	℃
A02	Outlet water temp.	℃
A03	Ambient temp.	℃
A04	Exhaust temp.	℃
A05	Gas return temp.	℃
A06	Outer piping temp.	℃
A07	Inner piping temp.	℃
A08	EEV aperture	
A09	Compressor current	A
A10	Radiator temp.	
A11	Voltage value	V
A12	Frequency	Hz
A13	Fan motor speed	r/min
A14	Fan motor speed	r/min

9. Wifi-Function

1. Download the ‘Tuya Smart’ App

Scan the QR code below to download the mobile APP.

Or search ‘Tuya Smart’ in App Store (IOS) or Google play (Android)

2. Sign up for the first time

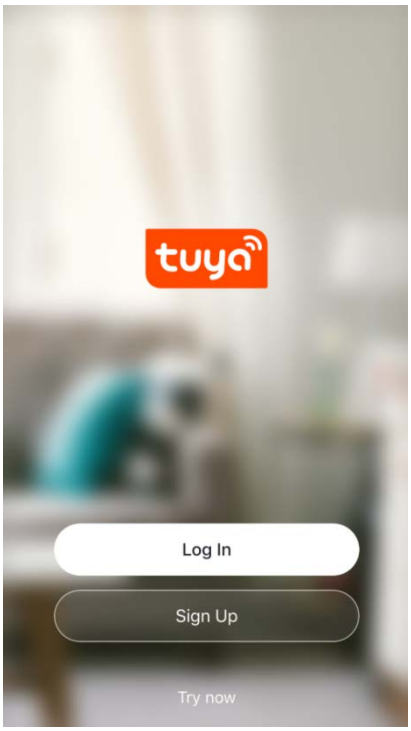

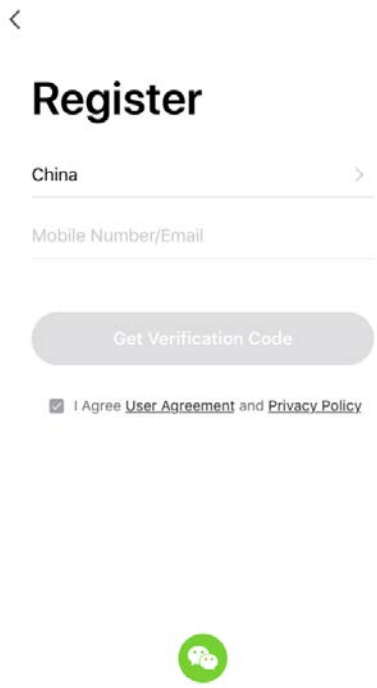

3. Press '+' to add a device

4. Choose 'Others' and 'Other Wifi' on the interface

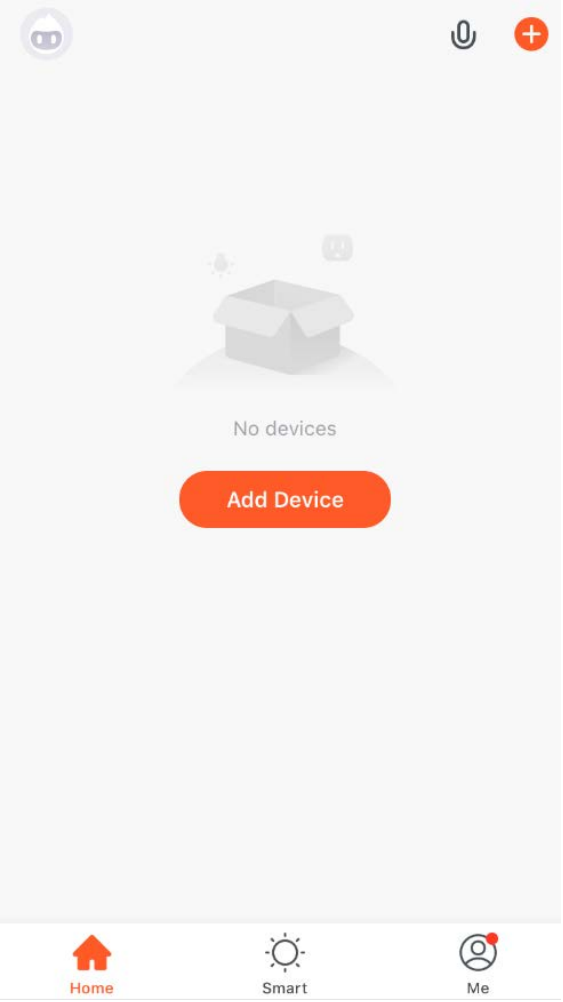

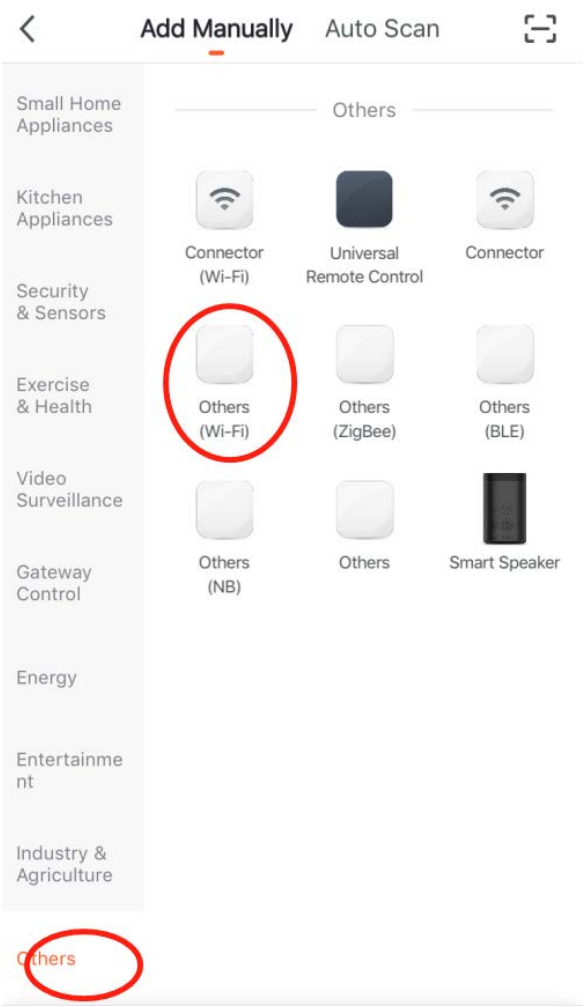

5. Put your mobile phone close to the pool heat pump, which must be under the same WiFi area

6. Make sure the device (controller/display) is reset (Hold M and + for 3 seconds to make the reset), then using your App to enter the WIFI account and password to connect WIFI.

7. **Reset the Wifi function: Hold the + and M for 3 seconds.**

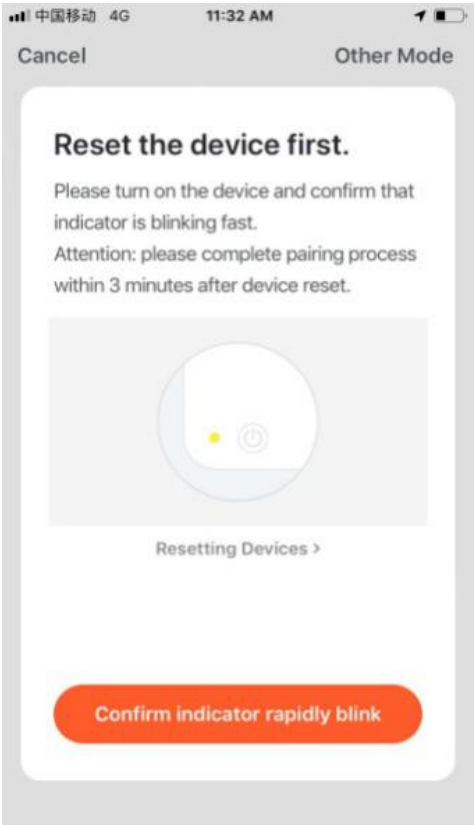

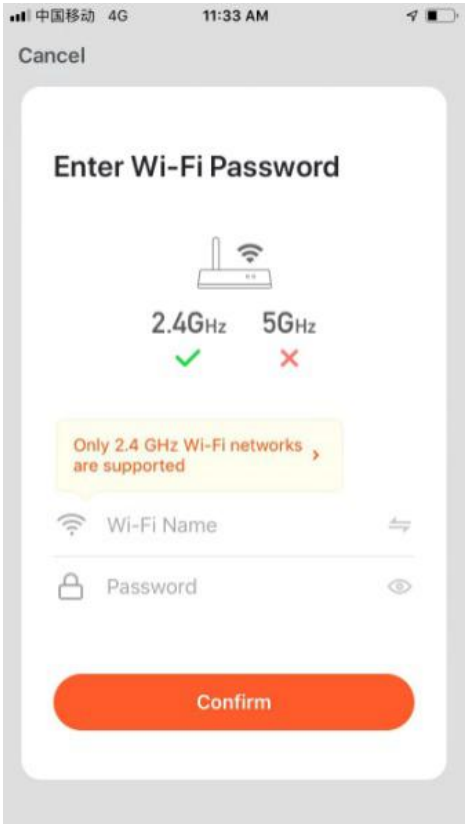

8. Press ‘Confirm’ to start the connection after completing. The device is successfully added if it’s connect, then press ‘Finish’.

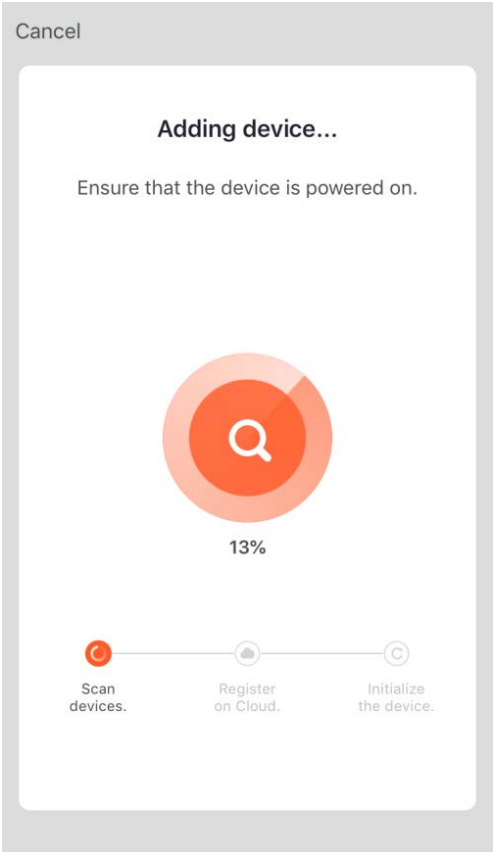

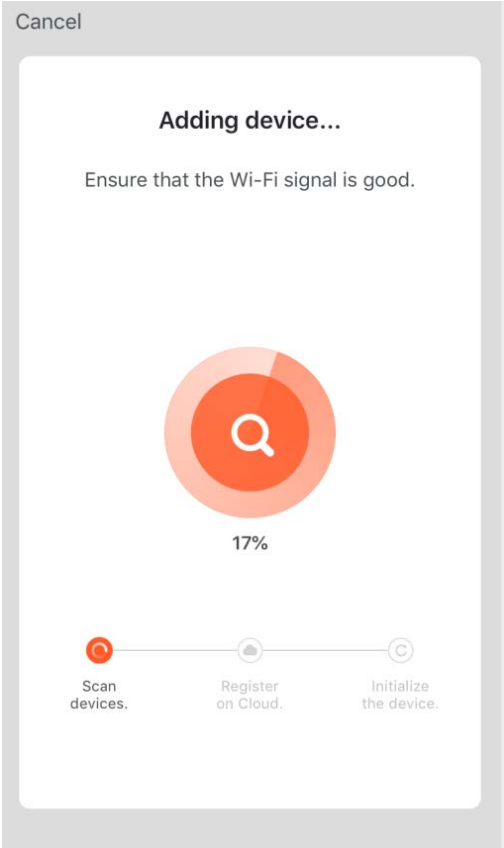

9. Functions

Remark: The heat pump APP function includes:

- Turn On/Off the machine
- Temperature setting and display
- Mode Selection
- Failure status display

10. Error codes & Solutions

Code	Description	Potential reasons	Solutions
E03	Water flow protection	Insufficient water flow	Check the water circuit system, the opening of by-pass kits, the running of water pump
		Water flow switch disconnected	Check the wiring and reconnect water flow switch
		Water flow switch defective	Change a new one
E04	Antifreeze protection	Ambient/Inlet water temp. is too low and the unit is on standby	The unit will be re-started when the ambient/inlet water temp. goes up.
E05	High pressure protection	Insufficient water flow	Check the water circuit system, the opening of by-pass kits, the running of water pump
		Ambient/ Water temp. is too high	
		Fan motor speed is abnormal or fan motor has damaged	Check the fan motor
		Excess refrigerant gas	Readjust the refrigerant volume
		High pressure switch disconnected or defective	Reconnect or replace high pressure switch
		Piping system jammed	Check the piping system
E06	Low pressure protection	Bad ventilation	Check the installation circumstance. Clean the evaperator. Check the running situation of fan.
		Low pressure switch disconnected or defective	Reconnect or replace low pressure switch
		Gas leakage (Check the gauge)	Detect the leakage point and make the maintainence
		Fan motor speed is abnormal or fan motor has damaged	Check the fan motor
		EEV blocked or piping system jammed	Check the piping system
E09	Connection failure between PCB and controller	Bad wire connection	Check the wiring
		Defective controller	Change a new controller
		Defective PCB	Change a new PCB
E10	Communication failure between PCB and driver module	Bad wire connection	Check the wiring
		Defective PCB	Change a new PCB
		Defective Driver module	Change a new driver module

E12	Exhause temp. too high	Insufficient water flow	Check the water circuit system/ water flow switch
		Lack of gas	Check if there is a gas leakage
		Piping system jammed	Check the piping system
		Exhause piping temp. sensor (Purple connector) detective	Change a new sensor
E15	Inlet water temp. sensor failure	Sensor disconnected or defective	Reconnect or replace sensor
E16	Outer piping temp. sensor failure	Sensor disconnected or defective	Reconnect or replace sensor
E18	Exhause piping temp. sensor failure	Sensor disconnected or defective	Reconnect or replace sensor
E20	Inverter module abnormal protection		Check the voltage, compressor, fan motor etc...
E21	Ambient temp. sensor failure	Sensor disconnected or defective	Reconnect or replace sensor
E23	Overcooling protection under cooling mode	Insufficient water flow	Check the water circuit system/ water flow switch
		Outlet water temp. sensor (Red connector) failure	Change a new sensor
E27	Outlet water temp. sensor failure	Sensor disconnected or defective	Reconnect or replace sensor
E29	Suction piping temp. sensor failure	Sensor disconnected or defective	Reconnect or replace sensor
E32	Overheating protection under heating mode	Insufficient water flow	Check the water circuit system/ water flow switch
		Outlet water temp. sensor (Red connector) failure	Change a new sensor
E33	Piping temp. too high protection under cooling mode	Ambient/water temp. is too high under cooling mode	Check the scope of using
		Refrigerant system is abnormal	Check the piping system
E42	Inner piping temp. sensor failure	Sensor disconnected or defective	Reconnect or replace sensor
E46	DC fan motor malfunction	Bad wire connection	Check the wiring of fan motor
		Fan motor defective	Change a new fan motor

11. Adjusting and Initial operation

11.1 Attention

●Do adjustment after electrical safety inspection.

●After the power is switched on, start the test running of heat pump, to see if the function is well.

●Forced operation is forbidden, because it is very dangerous to work without protector.

11.2 Preparation Before Adjustment

●Check that the system is installed correctly.

●Pipes and cables are connected correctly.

●Check that accessories are installed.

●Make sure the drainage is working properly.

●Make sure the system piping and connections are properly insulated.

●Check that ground/earth connection had been made correctly.

●Check that supply voltage can meet the requirement of rated voltage.

●Check that air inlet and outlet are working correctly.

●Check that the electrical leakage protector works correctly.

11.3 Adjustment Process

●Check that switch of display controller works properly.

●Check that function keys on display controller work properly.

● Check that indicator lights work properly.

●Check that drainage works properly.

●Check that system works correctly after starting up.

●Check that water outlet temperature is acceptable.

●Check if there are vibrations or abnormal sounds when the system is working.

●Check if the wind, noise and condensate water produced by the system affect the surrounding environment.

●Check if there is any refrigerant leakage.

●If any fault occurs, please check the instructions first to analyze and remove the fault.

12. Operation and maintenance

12.1 The heat pump should be installed and operated by qualified engineers. To ensure the continued correct functioning of the system it is recommended that it should be checked and maintenance should be carried out at regular. During maintenance, please pay attention to the points below:

●Check that all parameters are normal during system operation.

●Check for loose electrical connections and fix if necessary.

●Check electrical components and replace if necessary.

●After prolonged use, there may be calcium or other mineral substances deposited on the surface of the heat exchanger copper coil. This could affect the performance of heat exchanger and lead to higher than normal electrical consumption, increased discharge pressure and reduced suction pressure. Formic acid, citric acid, acetic acid or other organic acid can be used to clean the coil.

●Any dirt accumulated on the surface of the evaporator fins should be blown away using a 0.6Mpa air compressor, brushed by fine copper wire, or flushed with a high-pressurized water hose, usually one time per month. If there is too much dirt, we can use a paintbrush dipped in gasoline to clean the evaporator.

●After restarting the unit following a long period of inactivity, please do the following: examine and clean the equipment carefully, clean the water pipe system, check the water pump and fasten all the wire connections.

●Always use original replacement parts.

12.2 Refrigerant

Check the refrigerant filling condition by reading the data of the liquid level from the display screen, and also by checking the air suction and exhaust pressure. If there is a leakage or any components of the refrigeration circulation system have been changed, it is necessary to check the air tightness before anything else.

12.3 Leak detection and air tightness testing

During leak detection and air tightness experiment, never allow oxygen, ethane or other harmful flammable gases to enter the system: only compressed air, fluoride or refrigerant can be used for such a test.

12.4 To remove the compressor, please do the following

●Turn off the power supply

●Remove the refrigerant from the low pressure end; make sure you reduce the exhaust speed, and avoid leakage of frozen oil.

●Remove the compressor air suction and exhaust pipe.

●Remove the compressor power cables.

●Remove the compressor fixing screws.

●Remove the compressor.

12.5 Conduct regular maintenance according to the user manual instruction, to make sure the unit running is in good condition.

●If there is a fire, disconnect the power immediately and put the fire out with fire extinguisher.

●The unit's operating environment should be free of gasoline, ethyl alcohol and other flammable materials to avoid explosions or fire.

●Malfunction: if any malfunction occurs, find the reason, fix it and then reboot he unit. Never reboot the unit forcibly if the cause of the malfunction has not been eliminated. If there is refrigerant leakage or frozen liquid leakage, switch the unit off. If it is not possible to turn the unit off from the controller then disconnect the main power supply..

●Never short connect the wire for device protection otherwise, in case unit malfunction, the unit will not be protected normally and could be damaged.

13.Fault analysis and elimination method

Fault	Possible cause	Detection and elimination method
Discharge pressure is too high.	◆There is air or other non-condensable gas existed in the system. ◆Water heat exchanger is scaling or fouling blockage. ◆The circulation water volume is not enough. ◆Refrigerant charging is too much.	●Vent the air from water heat exchanger ●Wash and clean the water heat exchanger ●Examine the water system pipeline and pump. ●Drain part of the refrigerant
Discharge pressure is too low.	◆Liquid refrigerant flow through evaporator to compressor, which make foam for the frozen oil ◆Suction pressure is too low ◆Refrigerant charging is too less, the refrigerant air goes into liquid pipeline	●Examine and adjust the expansion valve, make sure the expansion valve temperature sensor bulb is close connected with the air suction pipe, and absolutely insulated with the ambient environment. ●Please refer to "Fluorine filling if suction pressure too low"
Suction pressure is too high.	◆Discharge pressure is too high. ◆Refrigerant charging is too much. ◆Liquid refrigerant flow through evaporator to compressor.	●Drain part of the refrigerant. ●Examine and adjust the expansion valve, make sure the expansion valve temperature sensor bulb is close connected with the air suction pipe, and absolutely insulated with the ambient environment.
Suction pressure is too low.	◆Ambient temperature is too low. ◆The evaporator liquid inlet or compressor suction pipe is blocked, expansion valve unadjusted, or failed. ◆The refrigerant is not enough in the system.	●Adjust suitable overheat temperature, examine whether there is Fluorine leakage from the expansion valve temperature sensor bulb. ●Examine Fluorine leakage. ●Examine the installation condition.
Compressor stopped because of high pressure protection.	◆The water inlet temperature is too high, circulation water is not enough. ◆The high pressure stop setting is not correct, the air suction overheat greatly. ◆Fluorine filling is too much.	●Examine water system pipeline and water pump. ●Examine the high pressure switch. ●Examine the Fluorine filling volume, drain part of refrigerant.
Compressor stopped because of motor overloading.	◆The voltage is too high or too low. ◆Discharge pressure is too high or too low. ◆Device loading failure. ◆Ambient temperature is too high. ◆Motor or connecting terminal is in short circuit.	●The voltage should be controlled within more or less 20V than rated voltage, and phase difference within ±30%. ●Examine the compressor current, compare with the full loading current indicated in the user manual. ●Improve air ventilation.
Compressor stopped because of built-in thermostat.	◆The voltage is too high or too low. ◆Discharge pressure is too high. ◆The refrigerant in the system is not enough.	●Examine the voltage to make sure it is within the specialized range. ●Examine the discharge pressure and find out the reason. ●Examine whether there is Fluorine leakage.
Compressor stopped because of low voltage production	◆Dry filter clogging. ◆Expansion valve failure. ◆The refrigerant is not enough.	●Examine, maintain, or change dry filter. ●Adjust or change expansion valve. ●Fill in refrigerant.
High noise of compressor	◆There is liquid hammer for liquid refrigerant flowing through evaporator to compressor.	●Adjust liquid supply, examine whether normal for the expansion valve and air suction over heat degree.
Compressor can not start.	◆Over current relay is tripped, insurance is burn. ◆The control circuit is not connected. ◆No current. ◆The pressure is too low, which can not conduct the pressure switch. ◆The contactor coil is burn out. ◆Water system failure, relay is tripped.	●Set the control circuit in manul mode, restart the compressor after maintenance. ●Examine controlling system. ●Examine power supply. ●Examine whether the refrigerant is too less. ●Reconnect, adjust two of the wiring.

14. After-sale service

If your heat pump does not operate normally, please turn off the unit and cut off the power supply at once, then contact our service center or technical department.